New products 2010

Art.-No.: 580726/02/10/12, dimensions and colour details valid within material-specific tolerances. Subject to changes to models. Design and layout: Schuster Thomsen Röhle Communication.

KERAMAG
Part of the Sanitec Group

Kreuzerkamp 11
D-40878 Ratingen
Tel +49 (0)21 02/9 16-0
Fax +49 (0)21 02/9 16-2 45
info@keramag.de
www.keramag.com

We create lasting values
KERAMAG
Part of the Sanitec Group

Keramag – a brand that stands for trust.

Keramag is a leading German manufacturer of high-quality sanitary ceramics. The strength of this brand reflects the accumulated expertise that comes from more than 100 years of experience and innovation. This can be seen in a product spectrum that meets the highest standards in design, comfort and convenience, functionality and individual design possibilities. And it extends to the fact that the requirements and demands of both people and the environment are carefully factored into every stage of the design and development of our products. Keramag is a part of the Sanitec Corporation, which is superbly placed as the European market leader in sanitary ceramics. The ideal preconditions for new developments that will remain just as valid and appealing tomorrow as they are today.

Preciosa II.
The aesthetics of stripped-down design.
Page 4

Xeno.
Geometric clarity.
Page 28

4U.
Diversity written large.
Page 50

Dejuna.
Bringing together generations.
Page 54

List of colours **Page 66**

Preciosa II.
The aesthetics of stripped-down design.

Preciosa – for over 40 years now, a byword for timeless modern design.

A new and unique combination of rectangular and circular shapes, Preciosa II supplements and brings up to date the classic designs of the original Preciosa. Scaled back to focus on essential purity and architectural clarity, Preciosa II emphasises graphic, pristine form. Straight, even surfaces with no additional levels combine with precision contours. Top-quality furniture that creates a comfortable feel – rounded off with WC and bidet.

600 and 900 mm in width and with a reduced projection, the washbasins can be combined with suitable vanity units. These come in a gleaming high-gloss white lacquered finish, and integrate themselves directly and gracefully into the washbasins. The drawers are divided into handy, orderly compartments and self-close gently. The same consistency of design is evident in the Preciosa II wall-hung wash-down WC and bidet. Rectangles and circles – very modern, very pure.

The tall cabinets and vanity units are all mitred. The round, chrome-plated handle echoes the circle as a key design element – a unique and elegant touch.

Design and function: the Preciosa II bathtubs underscore the pure design of this bathroom range while remaining delightfully comfortable to sit in or lie in.

Individual requirements coming together in perfect harmony: the Preciosa II washbasins can be rounded off with vanity units with practical compartments if extra storage space is required, or with high-quality chrome towel rails mounted beneath on either side.

Satisfyingly uniform, with a sophisticated design language: circles and rectangles combine to create a stripped-down design for WC and bidet.

A circular mirror, embedded in a luminous rectangle. The Preciosa II range includes unconventional illuminated mirror elements to suit washbasins of any width.

In the guest WC, too, the rigorous design creates a fine impression. The hand-rinse basin can be combined with a towel rail at the front or a vanity unit, and is complemented by the 400 mm-wide illuminated mirror element. Preciosa II – the aesthetics of stripped-down design.

Preciosa II.

1 Washbasin, 600 x 500 mm, Model-no. 123260.
Combinable with washbasin vanity unit 590 mm
or towel rail.

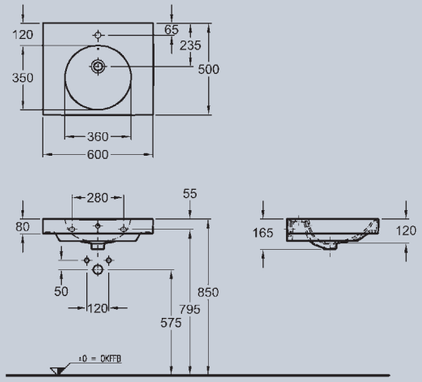

2 Washbasin vanity unit, 1 drawer, handle chrome-plated,
590 x 255 x 490 mm, Model-no. 800760 white high gloss varnished.
Combinable with washbasin 600 mm.

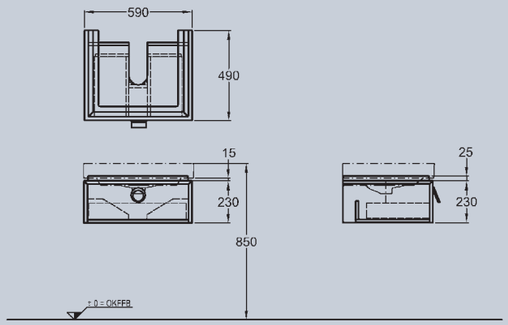

3 Washbasin, 900 x 500 cm, Model-no. 123290.
Combinable with washbasin vanity unit 890 mm
or towel rail.

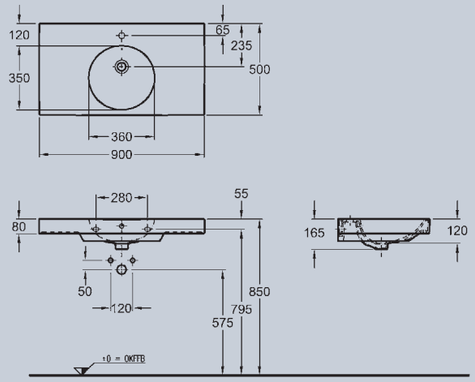

4 Washbasin vanity unit, 1 drawer, handle chrome-plated,
890 x 255 x 490 mm, Model-no. 800790 white high gloss varnished.
Combinable with washbasin 900 mm.

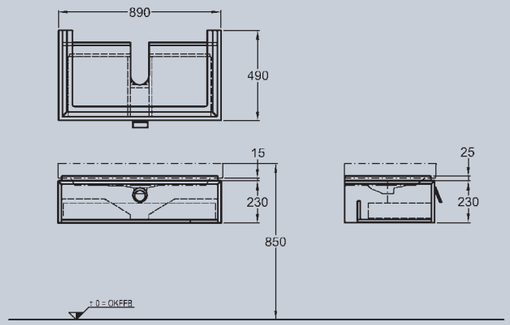

5 Hand-rinse basin, tap-hole right, without overflow,
400 x 280 mm, Model-no. 273240.
Combinable with hand-rinse basin vanity unit
390 mm or towel rail.

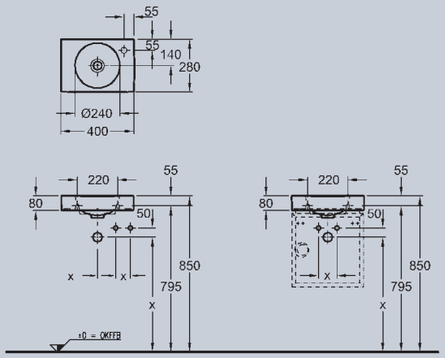

6 Hand-rinse basin vanity unit, 1 door, stopper right/left, handle chrome-plated,
390 x 425 x 270 mm, Model-no. 800740 white high gloss varnished.
Combinable with hand-rinse basin 400 mm.

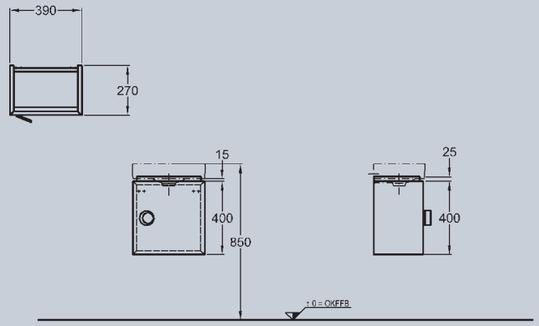

7 Towel rail, chrome-plated, 395 x 100 x 20 mm,
for mounting at the front, Model-no. 500740.
Combinable with hand-rinse basin 400 mm.

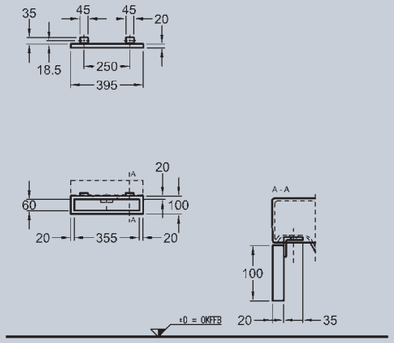

8 Towel rail, chrome-plated, 485 x 100 x 20 mm,
for mounting on the side, Model-no. 500750.
Combinable with washbasins 600 and 900 mm.

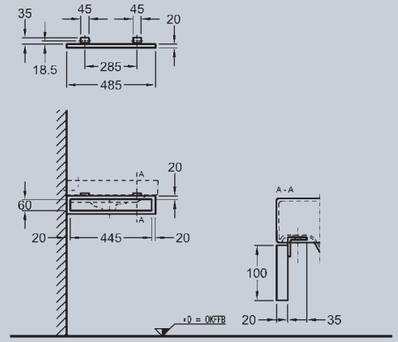

Self-closing
mechanism
drawer

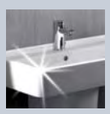

Ceramics

White (Alpin)
No. 000

Furniture

White
high gloss
varnished

The dimensional drawings reproduced here are based on provisional specifications. For further information, please visit **pro.keramag.com**

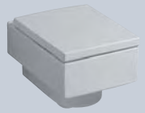

9 Wash-down WC, 6 l, wall-hung, 350 x 530 mm,
Model-no. 203200.
WC seat with soft closing mechanism, Model-no. 571280.

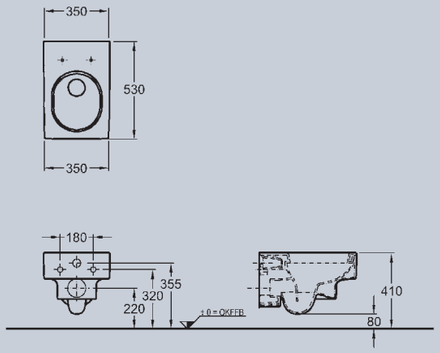

10 Bidet, wall-hung, 350 x 530 cm,
Model-no. 233200.

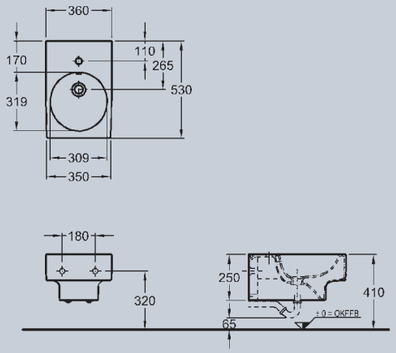

11 Tall cabinet, 1 door, stopper left/right, handle chrome-plated,
1 fixed shelf, 4 variable shelves, 400 x 1700 x 350 mm,
Model-no. 800700 white high gloss varnished.

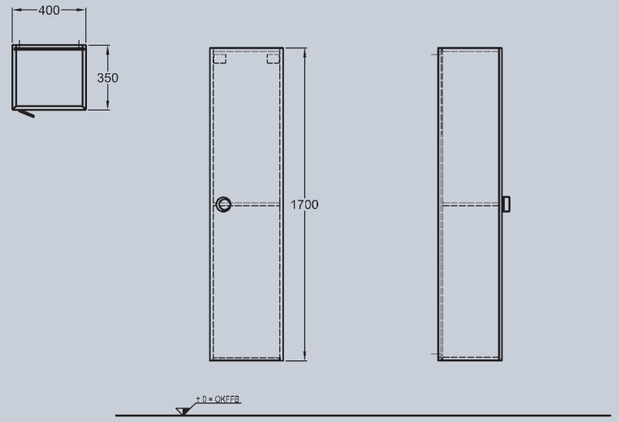

12 Illuminated mirror element, 55 W/830 T5 FC,
220-240 V~/50-60 Hz, IP 44, protection class 2,
400 x 900 x 45 mm, Model-no. 800840.
Suitable for hand-rinse basin 400 mm.

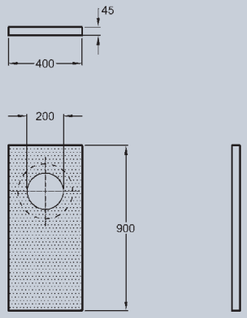

13 Illuminated mirror element, frame chrome-plated,
60 W/830 TL 5, 220-240 V~/50-60 Hz, IP 44,
protection class 2, horizontal and vertical mounting,
600 x 900 x 45 mm, Model-no. 800860.
Suitable for washbasins 600 • 900 mm.

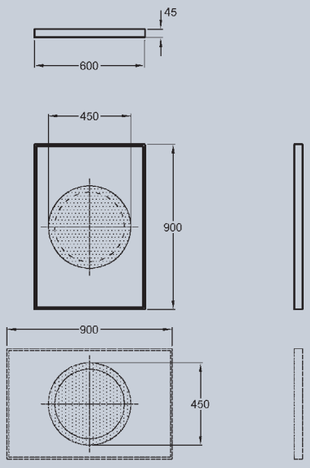

14 Rectangulare bathtub.
1800 x 900 mm, depth 470 mm, Model-no. 600385.
1905 x 905 mm, depth 430 mm, Model-no. 600395.

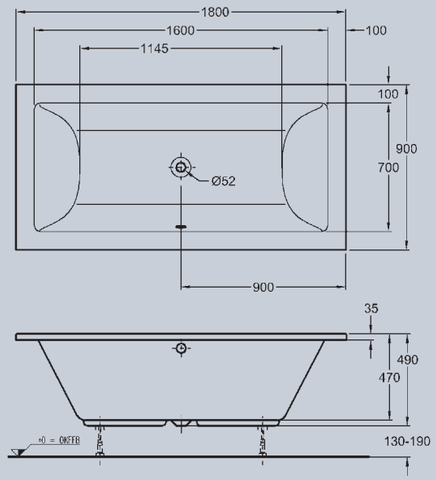

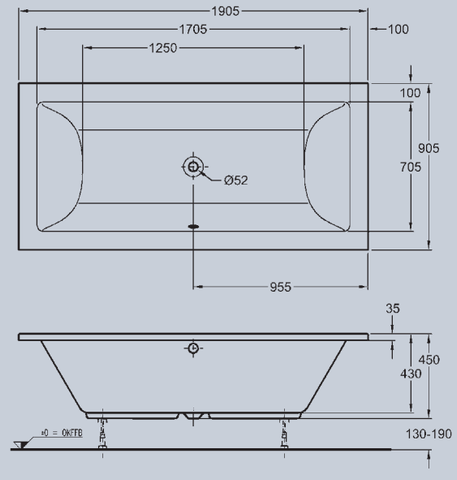

Covered
wall fixing

Floor clearance
≥ 6 cm

Soft closing
mechanism
WC seat

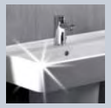

Ceramics/Acrylic

White (Alpin)
No. 000

Furniture

White
high gloss
varnished

The dimensional drawings reproduced here are based on provisional specifications. For further information, please visit **pro.keramag.com**

Xeno.
Geometric clarity.

The strict geometrical outlines of the Xeno washbasins, with new accompanying pieces in a brilliant, high-gloss lacquered finish: tall cabinets and vanity units, distinguished aesthetically by their direct, recessed transitions with the ceramic elements and by their integrated recessed handle strips.

Handy drawers for tidy storage, complete with flexible brackets. Stylish glass shelves to divide up the tall cabinet. Practical systems for creating order, plus self-closing drawers and pull-out shelves. When it comes to comfort and convenience, the new Xeno bathroom furniture sets the bar high.

The 600, 900 and 1200 mm-wide vanity units can be combined with all Xeno washbasins. Available in a white or anthracite high-gloss lacquered finish. A striking display of uniformity, creating clear-cut and sophisticated spatial concepts.

Xeno combines individual design requirements with high standards in comfort and convenience. Each piece of furniture is exquisitely mitred – with an accuracy that ensures pinpoint precision in the edges between drawers, pull-out shelves or doors and the main body of the piece, plus integrated recessed handle strips.

Available in four sizes, the high-quality illuminated mirror elements are convenient and dazzle-free. Suitable for washbasins of any size.

400 mm wide, with the tap fitted to the left or to the right, the new Xeno hand-rinse basin can be combined with a matching vanity unit and illuminated mirror element. Which means your guest WC will also benefit from the lucid design structures typical of this range.

Xeno.

1 Washbasin vanity unit, 2 drawers, 590 x 494 x 473 mm.
Model-no. 860260 white high gloss varnished.
Model-no. 860265 anthracite high gloss varnished.
Combinable with washbasin 600 mm.

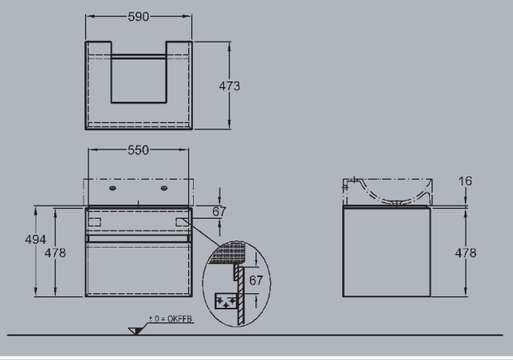

2 Washbasin vanity unit, 2 drawers, 880 x 494 x 413 mm.
Model-no. 860290 white high gloss varnished.
Model-no. 860295 anthracite high gloss varnished.
Combinable with washbasins 900 mm.

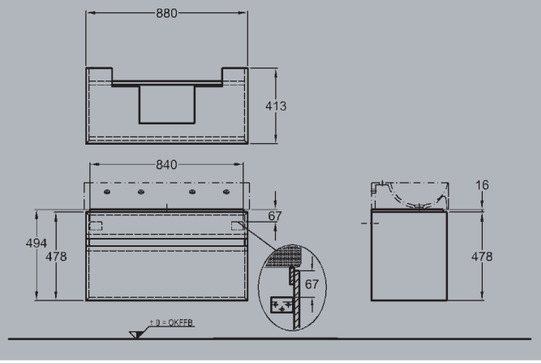

3 Washbasin vanity unit, 4 drawers, 1180 x 494 x 473 mm.
Model-no. 860220 white high gloss varnished.
Model-no. 860225 anthracite high gloss varnished.
Combinable with washbasins 1200 mm.

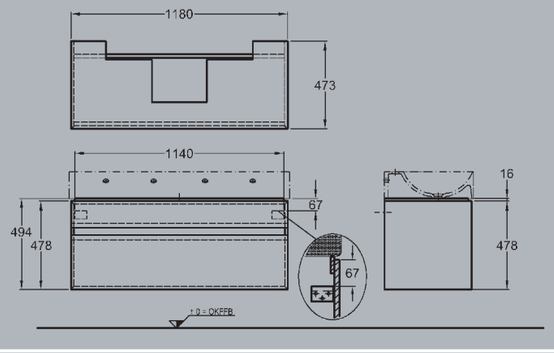

4 Hand-rinse basin, without overflow,
tap hole left, 400 x 230 mm, Model-no. 126240.
Combinable with hand-rinse basin vanity units.

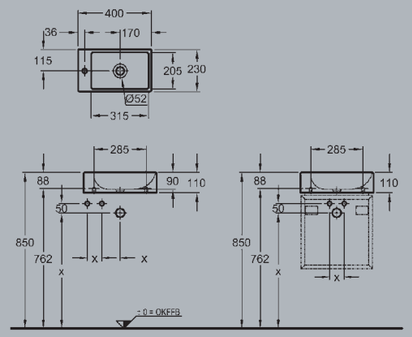

5 Hand-rinse basin, without overflow,
tap hole right, 400 x 230 mm, Model-no. 126245.
Combinable with hand-rinse basin vanity units.

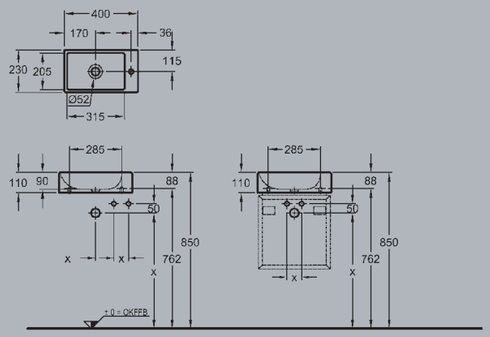

6 Hand-rinse basin vanity unit, 1 door, stopper left/right,
395 x 420 x 228 mm.
Model-no. 860240 white high gloss varnished.
Model-no. 860245 anthracite high gloss varnished.
Combinable with hand-rinse basins.

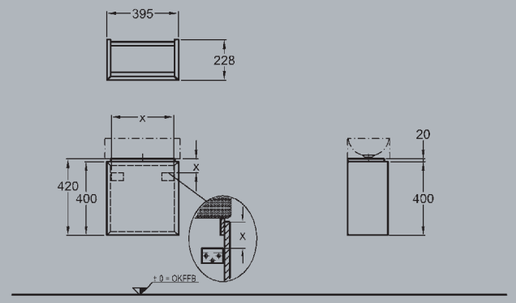

Self-closing
mechanism
drawer

Ceramics

White (Alpin)
No. 000

Furniture

White
high gloss
varnished

Anthracite
high gloss
varnished

The dimensional drawings reproduced here are based on provisional specifications. For further information, please visit **pro.keramag.com**

7 Tall cabinet, 2 doors, stopper left/right, 1 fixed shelf,
4 glass shelves, 400 x 1700 x 350 mm.
Model-no. 860200 white high gloss varnished.
Model-no. 860205 anthracite high gloss varnished.

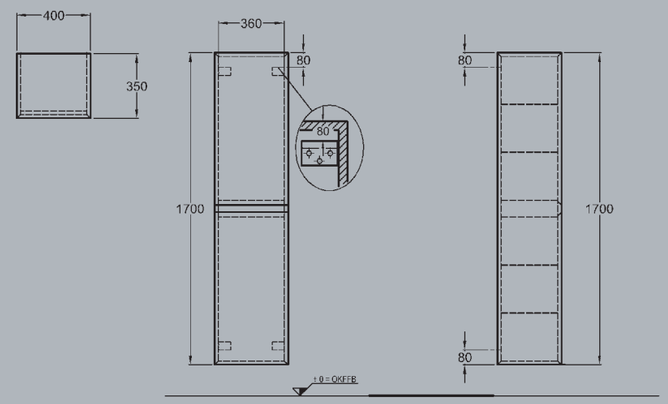

8 Illuminated mirror, left/right, frame polished stainless steel, T5-lamp, 21 W, 220-240 V~, 50-60 Hz, IP 44, protection class 2, 400 x 900 mm, Model-no. 860140.
Suitable for hand-rinse basin.

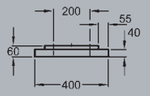

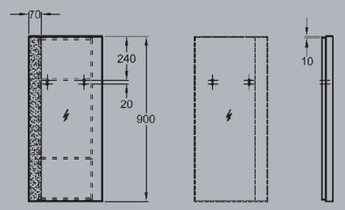

9 Illuminated mirror, frame polished stainless steel, 2 T4-lamps, 22 W, 220-240 V~, 50-60 Hz, IP 44, protection class 2, 600 x 770 mm, Model-no. 860160.
Suitable for washbasin 600 mm.

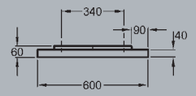

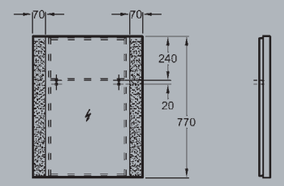

10 Illuminated mirror, frame polished stainless steel, 2 T4-lamps, 22 W, 220-240 V~, 50-60 Hz, IP 44, protection class 2, 900 x 770 mm, Model-no. 860190.
Suitable for washbasins 900 mm.

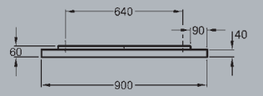

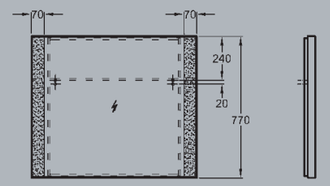

11 Illuminated mirror, frame polished stainless steel, 2 T4-lamps, 22 W, 220-240 V~, 50-60 Hz, IP 44, protection class 2, 1200 x 770 mm, Model-no. 860120.
Suitable for washbasins 1200 mm.

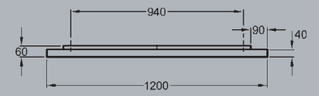

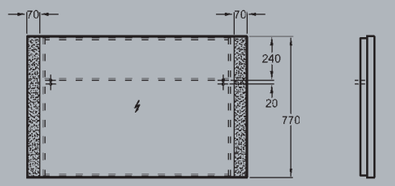

Furniture

White
high gloss
varnished

Anthracite
high gloss
varnished

The dimensional drawings reproduced here are based on provisional specifications. For further information, please visit **pro.keramag.com**

4U.
Diversity written large.

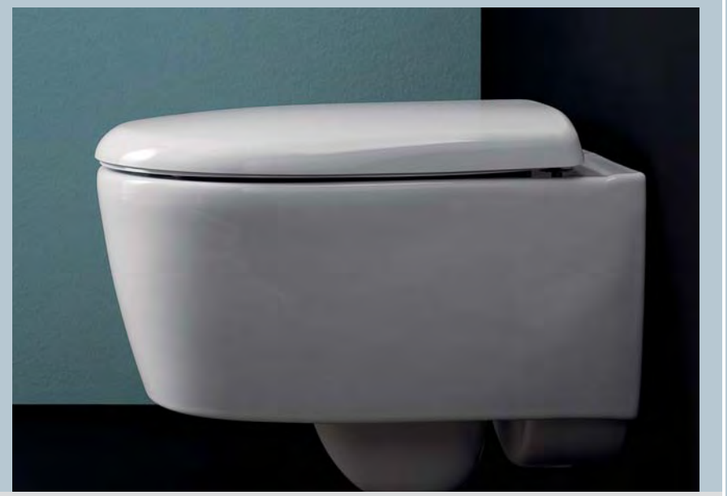

With a reduced projection of just 490 mm, the new 4U wash-down WC broadens the spectrum of products available within this successful range.

Wash-down WC, 6 l, wall-hung,
355 x 490 mm, Model-no. 203430.
WC seat, Model-no. 574400.
WC seat with soft closing mechanism,
Model-no. 574410.

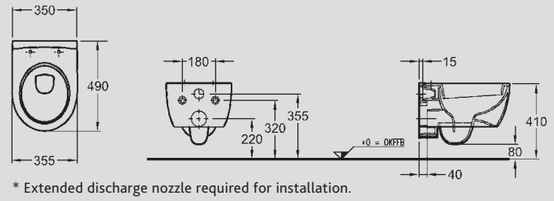

* Extended discharge nozzle required for installation.

Covered wall fixing

Floor clearance ≥ 6 cm

Soft closing mechanism WC seat

Ceramics

White (Alpin) No. 000

Dejuna.
Bringing together generations.

Modern in design, with details are both functional and well thought-out, Dejuna is the ideal range for bathrooms planned with foresight to accommodate every generation. Dejuna allows you to maintain your personal freedom and space in the long term, and to remain independent of help from others to a considerable degree, even when your mobility becomes restricted.

The perfect blended of harmony and quality of life, also available in combination with wall-hung WCs and the wall-hung bidet from the Renova Nr.1 Plan range.

Intelligently designed – includes an extra water level:
• provides clear differentiation between two levels of water
• when the basin is filled completely, the full depth of the water can be used
• when the basin is only half full, an additional half-dry shelf is available for depositing facecloths etc.

This innovative solutions has certain clear advantages. It becomes significantly easier for anyone to use utensils that have been deposited in the front of the basin. Filling the basin only to half level will be perfectly sufficient for daily washing and grooming, while saving water and reducing splashing at the front. Likewise, clearing away deposits in the basin, effortlessly and in one go, becomes easier than it would be on the shelf at the back.

The tap, shelf and washing and grooming utensils are within easy reach, and you can look at yourself in the mirror or even sit in front of it, with plenty of legroom. With a Dejuna washbasin, these things are simply a matter of course.

Gentle curves and straight, even surfaces create welcome areas for resting the arms and for supporting oneself.

Ideal for both young and shorter people, as well as when sitting down – thanks to the raised edge that enables a mirror to be fixed directly on top, it's possible for everyone to enjoy looking at themselves in the mirror while washing, doing their hair or make-up or shaving, etc.

With their flat design, Dejuna washbasins combine an attractive look with a high degree of comfort and convenience:
• 550, 600 and 650 mm wide
• The tap and shelf are within easy reach of young and old alike, thanks to a projection of just 525 mm
• A conveniently wide inner basin
• Even small hands can get a firm grip on the easy-to-grasp front and side areas
• Also available with optional half-pedestal

Dejuna WCs offer all-round well-thought out solutions to make everyday life easier. They not only enable easy sitting down and standing up for those with back problems and problem-free use for those in wheelchairs, but also include non-slip toilet seats and seat rings.

The highest level of sitting and usage comfort:
- A comfortable width of 395 mm, which is wider than standard WCs
- Rounded ceramic edges
- Easy-to-clean closed external surfaces thanks to hidden wall fixings
- Open rim with plastic wash distributor
- Option of sturdy toilet seat with cover or toilet seat ring
- Additional handle on cover of seat to enable easy opening and closing

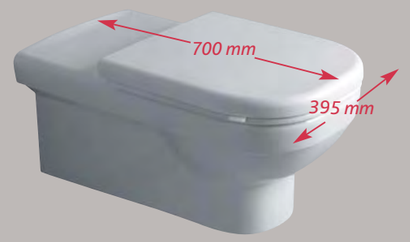

700 mm projection for wall-hung wash-down and wash-out WCs which enables wheelchairs to line up alongside toilet and makes transfer from wheelchair easier.

480 mm seat height incl. toilet seat on floor-standing wash-down WC to enable those with restricted movement to stand up and sit down more easily.

Comfortable to sit on thanks to wide seating area.

A continuous stainless steel hinge pin and a bevelled edge worked into the ceramic ensure a high level of stability even during side-on transfers from a wheelchair. The bevelled edge replaces the standard angle buffer embedded in the ceramic that is normally used for this kind of application.

All Dejuna wash basins and WCs are manufactured according to DIN 18024/18025 standards and therefore meet all requirements for accessible public and private bathrooms. You can find detailed information in the current Keramag trade catalogue.

Maintaining your personal freedom and space in the long term, as well as remaining independent of help from others even if you have limited mobility: these are requirements that can be fulfilled by the Dejuna range, with its modern design and special, functional and well thought-out details. Ideal for private and public bathrooms, as well as institutions that provide care and support. Dejuna – bringing together generations.

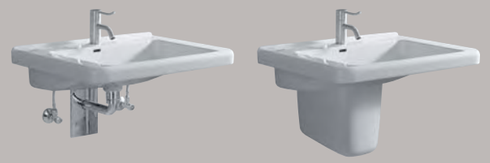

1 Washbasin, two levels for water inside, accessible by wheelchair, DIN 18024 part 2, DIN 18025 part 1+2, 550 x 525 mm, Model-no. 128555 with overflow. Combinable with half-pedestal, Model-no. 298510.

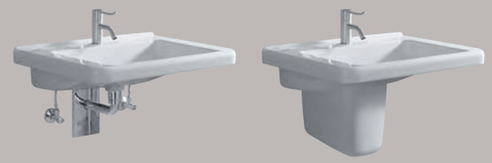

2 Washbasin, two levels for water inside, accessible by wheelchair, DIN 18024 part 2, DIN 18025 part 1+2, 550 x 525 mm, Model-no. 128557 without overflow. Combinable with half-pedestal, Model-no. 298510.

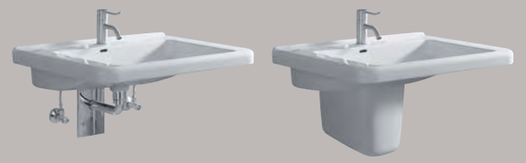

3 Washbasin, two levels for water inside, accessible by wheelchair, DIN 18024 part 2, DIN 18025 part 1+2, 600 x 525 mm, Model-no. 128560 with overflow. Combinable with half-pedestal, Model-no. 298510.

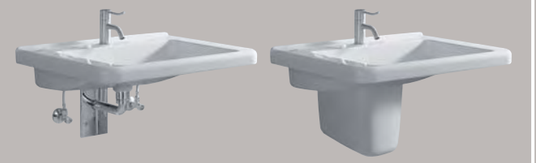

4 Washbasin, two levels for water inside, accessible by wheelchair, DIN 18024 part 2, DIN 18025 part 1+2, 600 x 525 mm, Model-no. 128562 without overflow. Combinable with half-pedestal, Model-no. 298510.

5 Washbasin, two levels for water inside, accessible by wheelchair, DIN 18024 part 2, DIN 18025 part 1+2, 650 x 525 mm, Model-no. 128565 with overflow. Combinable with half-pedestal, Model-no. 298510.

6 Washbasin, two levels for water inside, accessible by wheelchair, DIN 18024 part 2, DIN 18025 part 1+2, 650 x 525 mm, Model-no. 128567 without overflow. Combinable with half-pedestal, Model-no. 298510.

7 Wash-down WC, 6 l, wall-hung, DIN 18024, 18025, comfortable projection 700 mm, comfortable width 395 mm, Model-no. 208500.
WC seat, Model-no. 572800.
WC seat ring, Model-no. 572810.
Also available as wash-out WC, Model-no. 208550.

8 Wash-down WC, 6 l, floor-standing, horizontal outlet, DIN 18024, 18025, comfortable height ceramics 460 mm, comfortable width 395 mm, Model-no. 218500.
WC seat, Model-no. 572800.
WC seat ring, Model-no. 572810.

Kerafix

Concealed floor fixing

Covered wall fixing

Comfortable seat height ≥ 3 cm

Comfortable width

Floor clearance ≥ 6 cm

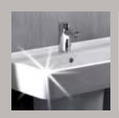

Ceramics

White (Alpin) No. 000

List of colours.

Preciosa II

Ceramics/ Acrylic

White (Alpin)
No. 000

Furniture

White
high gloss
varnished

Xeno

Ceramics

White (Alpin)
No. 000

Furniture

White
high gloss
varnished

Anthracite
high gloss
varnished

4U

Ceramics

White (Alpin)
No. 000

Dejuna

Ceramics

White (Alpin)
No. 000

All ceramic models also available with KeraTect® glaze finish with colour code 600 for KeraTect®/White (Alpin).